COLETTE

DANI VILA
ESTER PUJOL
2018

CARPYEN
BARCELONA

Carpyellum70 S.L.
C/ Pere IV 78-84 E-08005 Barcelona
T +34 93 320 99 90

Spain: comercial@carpyen.com
Export: export@carpyen.com
Special project: antony@carpyen.com

COLETTE

CARPYEN
BARCELONA

Carpyellum70 S.L.
C/ Pere IV 78-84 E-08005 Barcelona
T +34 93 320 99 90

Spain: comercial@carpyen.com
Export: export@carpyen.com
Special project: antony@carpyen.com

COLETTE

CARPYEN
BARCELONA

Carpyellum70 S.L.
C/ Pere IV 78-84 E-08005 Barcelona
T +34 93 320 99 90

Spain: comercial@carpyen.com
Export: export@carpyen.com
Special project: antony@carpyen.com

COLETTE

CARPYEN
BARCELONA

Carpyellum70 S.L.
C/ Pere IV 78-84 E-08005 Barcelona
T +34 93 320 99 90

Spain: comercial@carpyen.com
Export: export@carpyen.com
Special project: antony@carpyen.com

COLETTE

Materiales / Materials
Matériaux / Matters

Estructura: metal lacado
Structure: metal laquered
Structure: métal lacqué
Struktur: metall laquiert

Acabados / Finishes
Finitions / Ausführung

Blanco
White
Blanc
Weiss

Terracota
Terracotta
Terracota
Terracota

Verde menta
Mint green
Vert d'eau
Mint grün

Negro
Black
Noir
Schwarz

LED Integrado / Integrated / Intégré / Integriert

Ø 20 cm / 7.8":
7 W / 100-240 V / 50-60 Hz
704 Lumen / 2700 K / CRI 90

Ø 40 cm / 15.7":
18 W / 220-240 V / 50-60 Hz
2070 Lumen / 3000 K / CRI 80

Medidas / Measures / Mesurements / Mittengun

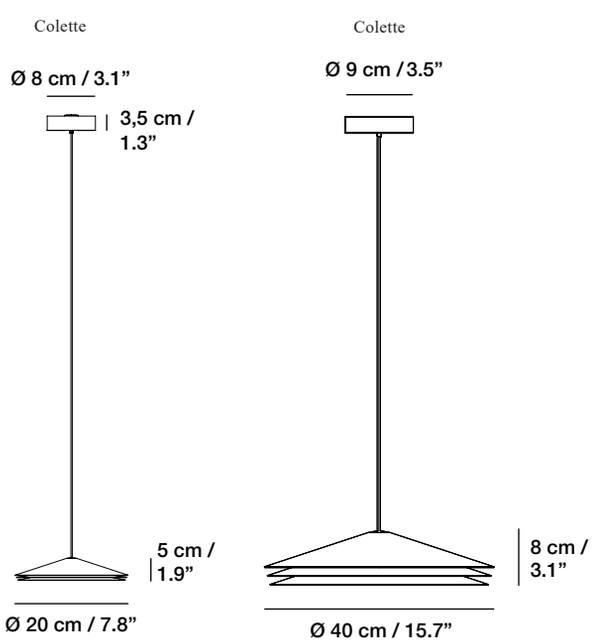

CARPYEN
BARCELONA

Carpyellum70 S.L.
C/ Pere IV 78-84 E-08005 Barcelona
T +34 93 320 99 90

Spain: comercial@carpyen.com
Export: export@carpyen.com
Special project: antony@carpyen.com