MARGOT

GABRIEL TEIXIDÓ 2016

CARPYEN
BARCELONA

Carpyellum70 S.L.
C/ Pere IV 78-84 E-08005 Barcelona
T +34 93 320 99 90

Spain: comercial@carpyen.com
Export: export@carpyen.com
Special project: antony@carpyen.com

MARGOT

CARPYEN
BARCELONA

Carpyellum70 S.L.
C/ Pere IV 78-84 E-08005 Barcelona
T +34 93 320 99 90

Spain: comercial@carpyen.com
Export: export@carpyen.com
Special project: antony@carpyen.com

MARGOT

CARPYEN
BARCELONA

Carpyellum70 S.L.
C/ Pere IV 78-84 E-08005 Barcelona
T +34 93 320 99 90

Spain: comercial@carpyen.com
Export: export@carpyen.com
Special project: antony@carpyen.com

MARGOT

Materiales / Materials
Matériaux / Matters

Estructura: Metal y madera
Structure: Metal and wood
Structure: Métal et bois
Struktur: Metall und Holz

Pantalla: Tejido
Lampshade: Fabric
Abat-jour: Tissu
Lampenschirm: Stoff

Acabados / Finishes
Finitions / Ausführung

Nácar Nacre Nacré Perlig	Níquel negro mate Matt black nickel Nickel noir mat Mattschwarzes Nickel	Oro Mate Matt gold Or mat Mattgold
Cobre mate Matt copper Cuivre mat Mattes kupfer		

Pantallas / Shades
Abat-jours /

Fibra natural Natural fiber Fibre naturelle Naturfasern	Plata Silver Argent Geld	Beige oro Gold beige Beige or Beige-Gold
Berenjena Aubergine Aubergine Aubergine		

Accesorios / Accessories
Accessoires / Zubehör

Roble natural Natural oak Chêne naturel Natürliche Eiche	Ante negro Black suede Suedine noir Schwarzes Wildleder	Ante blanco roto Off white suede Suedine blanc Weißes Wildleder
Ante gris perla Pearl gray suede Suedine gris perle Perlgraues Wildleder		

LED

E27 LED
20 W / 220-240 V / 50-60 Hz

Sin bombilla / Without bulb /
Sans ampoule / Ohne Glühbirne

Medidas / Measures / Mesurements / Mittengun

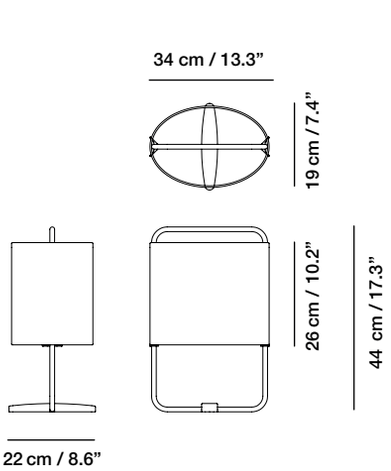

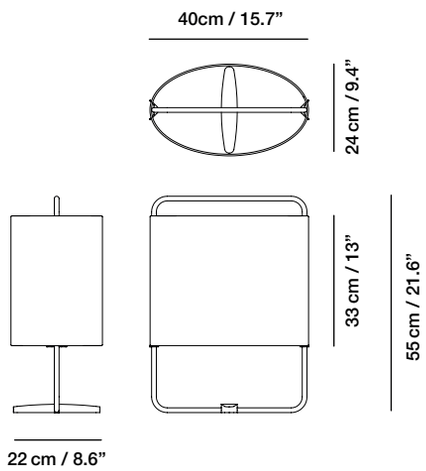

CARPYEN
BARCELONA

Carpyellum70 S.L.
C/ Pere IV 78-84 E-08005 Barcelona
T +34 93 320 99 90

Spain: comercial@carpyen.com
Export: export@carpyen.com
Special project: antony@carpyen.com